140 MHz Bandpass SAW Filter

250 KHz Bandwidth

BP62310

Electrical Characteristics					
Parameter	Sym	Minimum	Typical	Maximum	Unit
Center Frequency at 25°C	f_c	139.95	140	140.05	MHz
Insertion Loss at fc	IL	-	16	19	dB
1 dB Bandwidth	BW_1	0.14	0.16	-	MHz
3 dB Bandwidth	BW_3	0.25	0.29	-	MHz
40dB Bandwidth	BW_{40}	-	0.87	0.95	MHz
Passband Variation	$\Delta\alpha$	-	0.05	0.2	dB
Phase Linearity	-	-	0.5	2.0	Deg
Group Delay Variation	$\Delta\tau$	-	150	300	nsec
Absolute Delay	τ	-	2.85	3.00	µsec
Ultimate Rejection	α_{rej}	50	55	-	dB
Substrate Material	-	-	ST-Quartz	-	-
Ambient Temperature	T_A	-	25	-	°C
Package Size	DIP 2712				

Typical Performance

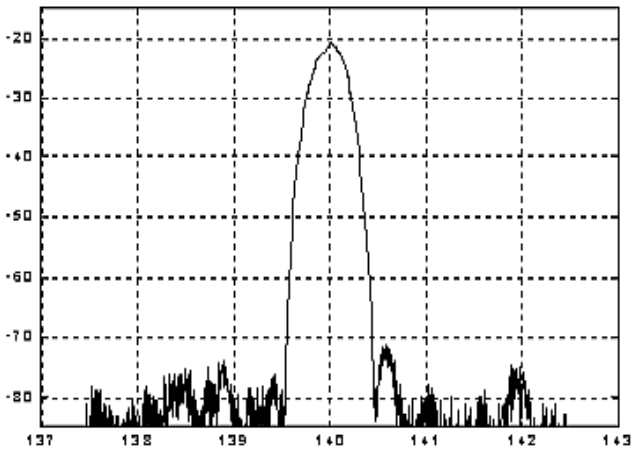

Package Outline

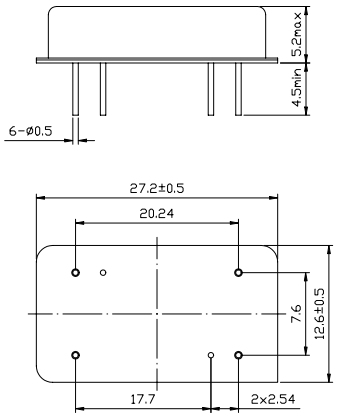

Matching Configuration

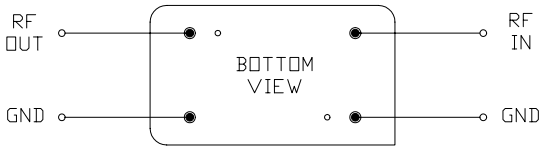

No Matching Required

Nominal Source/Load Impedance : 50 Ω

Note: Component values may change depending on board layout.

© 2006 by Vanlong Technology Co., Ltd.