70 MHz Bandpass SAW Filter

16 MHz Bandwidth

BP60130

Electronic Characteristics					
Parameter	Sym	Minimum	Typical	Maximum	Unit
Center Frequency at 25°C	fc	69.85	70	70.15	MHz
Insertion Loss at fc	IL	-	23.0	26.0	dB
1 dB Bandwidth	BW_1	15.0	15.8	-	MHz
3 dB Bandwidth	BW_3	16.0	16.7	-	MHz
40dB Bandwidth	BW_{40}	-	20.4	20.9	MHz
Passband Variation	-	-	0.3	0.7	dB
Phase Linearity	-	-	2.5	4.0	Deg
Group Delay Variation	-	-	30	50	nsec
Absolute Delay	-	-	1.34	-	µsec
Ultimate Rejection	-	50	60	-	dB
Substrate Material	-	-	128-$LiNbO_3$	-	-
Ambient Temperature	Ta	-	25	-	°C
Operating Temperature Range	To	-55	25	85	°C

Typical Performance

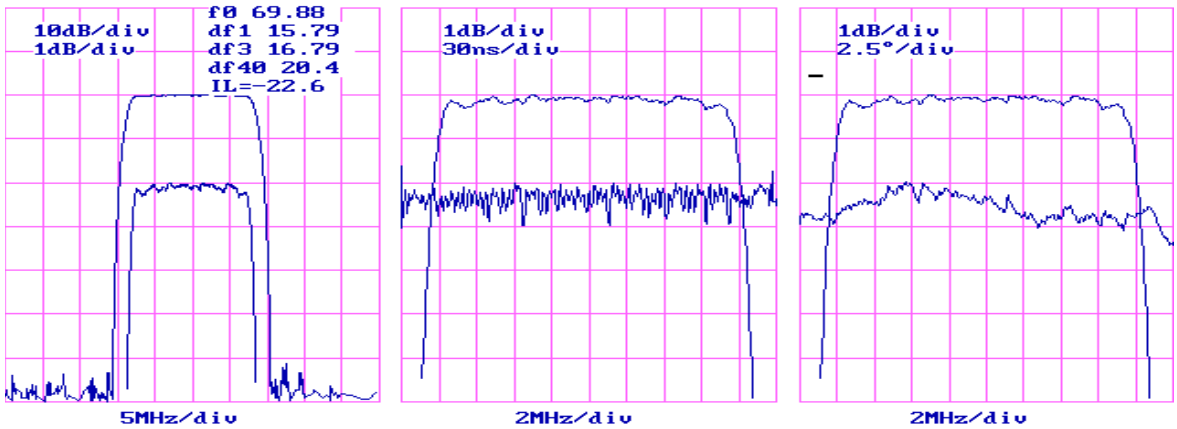

Package Outline

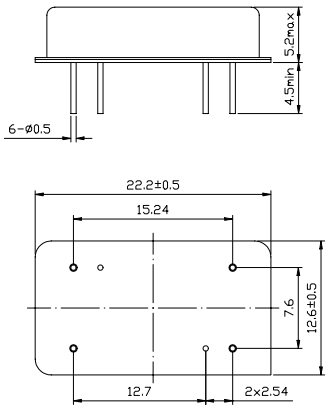

Matching Configuration

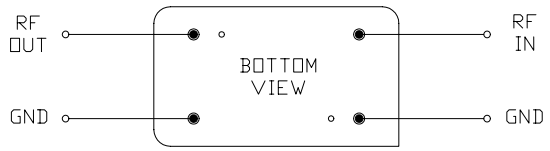

No Matching Required

Nominal Source/Load Impedance : 50 Ω